Vol. 22, Issue 2

PRODUCT CATALOG

Ultra Clean® TECHNOLOGIES CORP.

Clean Easy

Seal Easy

Contamination Control Systems

Hose, Tube, Pipe Cleaning & Sealing

J&E Machines B.V.
Jacobus Lipsweg 100
NL-3316 BP Dordrecht

+31 (0) 78 617 98 39
info@jemachines.nl

IBAN: NL87INGB0662309022
BTW: NL809898329.B01

KvK: 24322318
www.jemachines.nl

Table of Contents

INTRODUCTION

A Word About Ultra Clean Technologies 3-4
Contact Information 5
Applications - Hose, Tube & Pipe Cleaning 6
Recommended Cleaning Procedures 7

CLEAN EASY

CLEAN EASY - Clean Easy System Overview.....8

LAUNCHERS (Hand Held Launchers, Kits, Nozzles & Adaptor Rings)

UC-EL1.25, 1¼" Hand Held Launcher & Kits.....9
UC-HL2, 2" Hand Held Launcher & Kits 10
UC-HL3.5, 3½" Hand Held Launcher & Kits 11
UC-HL4.5, 4½" Hand Held Launcher 11
Launcher Kits Chart.....12-13
Launcher Nozzles & Adaptor Rings 14-15

PROJECTILES

Projectile Types and Applications.....16
Projectile Kits 17
Projectile Charts 17

ACCESSORIES for Launchers, etc.

Launcher Stand, Projectile Catcher Bucket, Quick Connects, Nozzle Holder ..18
UC-D1 Super-Dry Compressed Air Dryer 19

PRODUCTION EQUIPMENT

UC-BM1.25-G3 1¼" Bench Mount Launcher.....20
UC-PVS-G4 Projectile Verification System.....21
UC-PVS-HL Hand-Held Launcher 21
UC-CAL-MS Carousel AutoLoader & Hopper Boxes.....22
UC-CAL-MARK Carousel AutoLoader Marking System, Hand-Held Launcher ...23

ACCESSORIES for Production Equipment

Marking System Markers Kit and Markers.....24
UC-CB Containment Barrel 24

COMPATIBILITY & SIZING CHARTS

Production Equipment Compatibility Chart.....25
Sizing Charts for Ultra Clean Projectiles & Nozzles (Hose, Tube, & Pipe)... 26-30
ISO 4406 Independent Test Report.....31

SEAL EASY

SEAL EASY - Clean Seal System Overview.....32
Clean Seal Capsules, Private Label Capsules.....33
Clean Seal System UC-CSS-230V-AK, UC-CSS-120V-AK 34
Clean Seal Capsules Shrink-Time Chart 34
UC-HL1920E Heat Shrink Gun, Clean Seal System Kits.....35
Capsule Dispenser Stand Parts and Kit 36
Clean Seal System and Capsules Parts List.....37
Capsule Size Selection by Fitting, by Wrench Size..... 38-39

J&E Machines B.V.
Jacobus Lipsweg 100
NL-3316 BP Dordrecht

+31 (0) 78 617 98 39
info@jemachines.nl

IBAN: NL87INGB0662309022
BTW: NL809898329.B01

KvK: 24322318
www.jemachines.nl

A Word About Ultra Clean Technologies and Our Products...

Our History

Ultra Clean Technologies is the outgrowth of owner Bruce Riley's successful sales career within the hydraulics industry. From these humble beginnings, he and his wife and co-owner, Debby Riley, organically grew the company into a worldwide leader in hydraulic hose cleaning and sealing technologies. It was their keen interest in helping OEMs and their suppliers meet the increasing demand for contamination-free hoses and tubes that drove the company forward as an industry innovator.

As the company blossomed, so too did the need for space. Remaining true to their roots in southern New Jersey, the couple opened its main headquarters in nearby Bridgeton. The refurbished industrial building is approximately 35,000 square feet and houses Ultra Clean Technologies' sales and administrative offices, and its manufacturing, warehousing, shipping/receiving, engineering and R&D departments. In addition to North America, the company now operates in Europe, South America, Australia and China with additional warehousing in Europe and Asia, which facilitates global distribution of the product line.

From simple beginnings to international recognition as a leader in the hose and tube cleaning industry, Ultra Clean attributes its success to understanding the markets it serves and providing top quality care, products and innovation to its customers.

Our Products

Our flagship product, the Ultra Clean System, offers advanced cleaning over traditional flushing and other methods for ridding contaminants from hose, tube and pipe assemblies. The Ultra Clean System utilizes either a Hand Held Launcher or Bench Mount Launcher to shoot Ultra Clean projectiles through hose, tube, or pipe assemblies, ensuring contaminants are thoroughly dispelled. For production environments the Projectile Verification System and the all-inclusive AutoLoader provides a unique and effective way to clean each hose or tube assembly without sacrificing quality or efficiency. Building on our core product, we offer the *Clean Seal System*, which uses a proprietary heat shrink technology with our Clean Seal Capsules to securely seal the ends of cleaned hose and tube assemblies, providing a superior alternative to traditional caps and plugs. This manual provides detailed information on these systems and associated products and parts.

Ultra Clean Technologies' hose and tube systems are manufactured and assembled in the U.S.A and have a one-year Manufacturer's Warranty. The durability of our products eliminates the need for returns! *Private labeling is available for many of our products. If interested, ask us for details.*

J&E Machines B.V.
Jacobus Lipsweg 100
NL-3316 BP Dordrecht
+31 (0) 78 617 98 39
info@jemachines.nl
IBAN: NL87INGB0662309022
BTW: NL809898329.B01
KvK: 24322318
www.jemachines.nl

Research & Development

Demand-driven R&D has inspired us to create these and more innovative new products, providing targeted solutions to industry-specific challenges. Our engineering team has a well-rounded and extensive understanding of hydraulics that enables us to work closely with the industries we serve, while also considering wider-use applications of our products for all industries that require contamination-free hoses and tubes in order to prevent costly equipment downtime or failure. Our products meet - and almost always exceed - ISO standards for hydraulic oil cleanliness, and are independently tested to determine the level of cleanliness to which hoses or tubes are actually cleaned.

Training & Education

In addition to our products, Ultra Clean Technologies provides comprehensive training and education both on Contamination (what it is, where it comes from, and how it damages fluid power systems), and Contamination Control using Ultra Clean Technologies products. We provide on-site training on the use of all our systems, and will "train the trainer," or an entire team, depending on the customer's desire. Further, we certify end users, OEMs or distributors who complete the Ultra Clean Technologies webinar on Contamination Control and Clean Hydraulic Hose Assembly Procedures. Participants can also request a co-branded impact movie on contamination control.

Service Excellence

Highly experienced in the Hose and Tube Cleaning industry, Ultra Clean Technologies' Customer Service team give you immediate and direct access to expert solution providers. Every salesperson has earned the Milwaukee School of Engineering's *Certificate of Contamination Control*. We share our expertise in product applications and performance over the phone and in the field.

Shipping & Warehousing

To enhance our reputation for service excellence, Ultra Clean Technologies has an established global distribution network - including international distribution points in Canada, Europe, South America, Brazil, China and Australia. For our customers, this means shorter lead times and minimized shipping costs. We keep a fully stocked warehouse with same day shipping for our North American and South American customers. European customers can count on our warehouse in The Netherlands for quick order fulfillment.

Thank you for Choosing Ultra Clean Technologies!

J&E Machines B.V.
Jacobus Lipsweg 100
NL-3316 BP Dordrecht
+31 (0) 78 617 98 39
info@jemachines.nl
IBAN: NL87INGB0662309022
BTW: NL809898329.B01
KvK: 24322318
www.jemachines.nl

Contact Information

Ultra Clean Technologies Corp.
1274 Highway 77
Bridgeton, NJ 08302 U.S.A.

sales@ultracleantech.com
www.UltraCleanTech.com

Bruce Riley, Owner & C.E.O.

Domestic Sales

Main/Local: **856-451-2176**
Toll-Free: **800-791-9111**
FAX: **856-453-4975**

Matt Hunzer - x203
Sales Manager
North America
Cell: 570-793-5451
mhunzer@ultracleantech.com

Ethan Weinstein - x211
Capsule Division Manager
North America
eweinstein@ultracleantech.com

Lisa Orndorf - x207
Inside Sales
North America
lorndorf@ultracleantech.com

Hunter Jackson - x214
Inside Sales
North America
hjackson@ultracleantech.com

International Sales

Main: **+1 856-451-2176**
FAX: **+1 856-453-4975**

Bruce Riley - x202
Sales Director
Brazil, China, India
Cell: +1 609-319-4176
briley@ultracleantech.com

Eric van Alphen - x209
International Sales Director
Australia, Europe,
S. America
(English, German, French, Dutch)
Cell: +1 484-885-9498
Skype: evanalphen
evanalphen@ultracleantech.com

Joemy Nunez - x230
Inside Sales Manager
Mexico, Central America
(English, Spanish)
Cell: +1 856-332-7207
Skype: joemynunez
jnunez@ultracleantech.com

Heather Baxter - x210
International Sales
hbaxter@ultracleantech.com

Technical Specialists

Please use the appropriate domestic or international main telephone number in sales columns to the left.

Roger Smith - x204
Product Support Specialist
rsmith@ultracleantech.com

Jeffrey Contino - x213
Design Engineer
jcontino@ultracleantech.com

ADMINISTRATIVE

Debby Riley
Owner & C.F.O.
driley@ultracleantech.com

Debra Jeffries
Operations Manager
djeffries@ultracleantech.com

Cheryl Ewing
Accounting
cewing@ultracleantech.com

Connect with Ultra Clean!

Applications for Hose, Tube & Pipe Cleaning Systems

Serving the Construction, Mining, Marine, Off-Shore, Hose and Tube Assembly markets, and many others....

Hydraulics	Removes rubber dust and metal particles from the cutting process on hydraulic hose. Removes metal flash from the crimping process on hose and tubes. Removal of contaminated oil from hoses, tubes and pipes in hydraulic systems. (Use the Ultra Clean System to reduce downtime, extend filter life and reduce the risk of failure and premature wear due to CONTAMINATION!)
Pneumatics	Eliminates rubber contamination, metal particles, contaminated oil and moisture that causes breakdowns and inefficiency.
Heat Exchangers & Condensers	Eliminates contamination that reduces heat transfer resulting in low level performance.
Steam Boilers	Removes most scaling in steam pipes for maintenance servicing.
Air Conditioning & Refrigeration	Eliminates minute particles in copper tubes and coolant lines that affect system performance.
Oxygen & Gas	Eliminates oil, grease and other contaminants from copper or S/S tubing.
Oil, Gas & Chemical Processing	Efficient cleaning of product pipes as part of service maintenance.
Earthmoving Equipment Maintenance	Reduction in flushing time and filter usage.
Automotive & Servicing	Cleaning of fuel lines and brake lines prior to assembly and servicing of components.
Food & Beverage Product Recovery	Retrieval of product from lines. Reducing or eliminating solvents or detergents.
Gun Barrels	To remove rust, scale or powder residue much faster than brushing or swabbing.

Specific information available upon request.

J&E Machines B.V.
Jacobus Lipsweg 100
NL-3316 BP Dordrecht
+31 (0) 78 617 98 39
info@jemachines.nl
IBAN: NL87INGB0662309022
BTW: NL809898329.B01
KvK: 24322318
www.jemachines.nl

Recommended Cleaning Procedures

Hose

When hydraulic hose is cut with metal-blade saws or abrasive wheels, tremendous heat is generated, causing rubber and metal particle and dust contaminants to stick to the hose or tube as they cool. It is vitally important to clean the hose immediately after the cutting process to avoid this. Fire one projectile in each direction through the length of the hose prior to installation of end connections. This will allow cleaning in the areas occupied by the insertion of the hose nozzle at either end. After crimping or swaging fittings, an Ultra Clean projectile should be fired through the entire hose assembly to remove metal flash. It is vital to apply Clean Seal Capsules to hose ends immediately after cleaning to avoid recontamination, and to protect hose threads.

Hydraulic Hose - Internal/External Skive

Before skiving, *two* (UC) Ultra Clean projectiles should be fired in each direction through the hose. If a mandrel is inserted into the ID of the hoses or tube for skiving purposes, the mandrel and mandrel lubricants must be clean and contamination free. It may be necessary to fire one or two UC or Tube Style Projectiles through the hose after the internal skiving process to remove rubber particles and lubricants. A custom Hose Nozzle to occupy the skived area may be necessary to achieve a higher level of cleanliness. After crimping or swaging fittings, a (UC) Ultra Clean Projectile should be fired through the entire hose assembly to remove metal flash. It is vital to apply Clean Seal Capsules to end fittings immediately following the last projectile to avoid recontamination, and to protect hose threads.

Used Hose & Tube Assemblies

Hydraulic hose and tube assemblies from systems that have experienced a failure need to have all contaminated oil removed. Disconnect each end of the assembly and secure one end into the Projectile Catcher (UC-PC). Fire air into the assembly without a projectile for several seconds to remove the excess contaminated hydraulic fluid. Fire 3 to 4 Ultra Clean Projectiles through assembly to remove particulates. Visibly check the last projectile for contamination. Repeat process until projectile has no signs of rubber or metallic particles on it. If the projectiles continue to show particles the hose may need to be replaced. This is a sign of a rubber tube that is failing.

Tube

When tubing requires cutting, the ends should be thoroughly deburred prior to use of the cleaning system. A tube nozzle and two Ultra Clean projectiles should be used to clean the tube. If the tube contains rust, weld slag or other corrosion inside, an abrasive projectile should be used first and as many times as necessary to remove the corrosion. Follow with an Ultra Clean projectile to insure proper cleanliness. If flaring is required, do so prior to cleaning. The use of a JIC nozzle is necessary to mate properly with a flared tubing end. If special fittings are used that require crimping, the use of an Ultra Clean projectile, in addition to the procedure described above, is recommended after the assembly is complete. The tube-style projectile should be used to remove mandrel lubricants, grease or oil if encountered. Tube-style projectiles are also recommended for stainless steal tubing.

Pipe

We recommend the Ultra Clean Scrub Projectile when rust is present, or an Abrasive Projectile for cleaning the inside of all types of carbon steel piping products. These projectiles may be used more than once if necessary, or until they wear out. After several passes with the Scrub or Abrasive Projectiles, an Ultra Clean Projectile should be fired through the pipe, removing debris left behind by previous projectiles. This can only be accomplished if the pipe has a relatively smooth surface. Our Scrub Projectiles will negotiate sweep elbows only. The Ultra Clean Projectile can also be soaked in corrosion inhibiting chemicals, effectively applying them 360 degrees to the inside surface as the projectile passes from one end to the other.

The Ultra Clean UC-D1 Super-Dry Compressed Air Dryer is recommended for all cleaning procedures. This ensures that only clean, dry air is used to move projectiles through the hose, avoiding re-contamination from air particulates. See page 19 for details.

J&E Machines B.V.
Jacobus Lipsweg 100
NL-3316 BP Dordrecht
+31 (0) 78 617 98 39
info@jemachines.nl
IBAN: NL87INGB0662309022
BTW: NL809898329.B01
KvK: 24322318
www.jemachines.nl

CLEAN EASY
Hose, Tube & Pipe Cleaning Systems

Ultra Clean Technologies offers a fast, less invasive way to clean contaminated hydraulic lines by shooting a projectile through the hose or tube assembly with a pneumatic launcher. The Ultra Clean Projectile strips out internal contamination, removing dirt, gunk and oil. Now your clean oil will stay clean as it reaches expensive components, preventing failure and system downtime.

Hand Held Launchers & Kits
Accessories
Nozzles & Adapter Rings
Projectiles

Production Equipment
Bench Mount Launcher
Projectile Verification System (PVS)
Carousel AutoLoader
Marking Systems

Clean Easy with Ultra Clean!

Connect with Ultra Clean!

J&E Machines B.V.
Jacobus Lipsweg 100
NL-3316 BP Dordrecht

+31 (0) 78 617 98 39
info@jemachines.nl

IBAN: NL87INGB0662309022
BTW: NL809898329.B01

KvK: 24322318
www.jemachines.nl

Launchers & Kits

Our launchers enable unsurpassed cleaning and removal of contaminates from hoses, tubes or pipes! Launcher kits provide added value and cost savings!

Launcher Kits Details

- Launcher kits are pictured with appropriate launchers.
- Kits can be customized with approval and cost adjustments.
- See Launcher Kits Chart for details and contents of each kit, see **Pages 12-13.**

Air Requirements for All Launchers

- 80 PSI (5.5 Bar) minimum to 110 PSI (7.5 Bar) maximum.
- ½" ID air hose to ensure 55 SCFM (1.6 m^3/min) air flow.
- 5 micron filter and regulator with gauge are strongly suggested!
- Clean, dry air must be used to comply with the Ultra Clean Technologies equipment warranty. We strongly suggest the UC-D1-Super-Dry Compressed Air Dryer, see **Page 19.**

UC-EL1.25 | 1¼" Economy Launcher

- Cleans ⅛" through 1¼" hose, tube or pipe.
- Quarter turn locking ring for easy nozzle change and projectile loading.
- Durable brass and aluminum internal parts, strong plastic handle and anodized aluminum firing head and locking ring.
- Effortless to operate because of its simplistic ergonomic design.
- Ideal for mobile and job site applications due to size & portability.
- Nozzles smaller than ¼" are optional.
- Additional nozzles for JIC and tube applications available.
- For kits contents, see chart Pages 12-13.

UC-EL-8 Kit

¼" - 1¼" (6mm - 32mm ID)

UC-EL-8-DP Kit

¼" - 1¼" (6mm - 32mm ID)

Great starter kit for applications up to 1¼" ID!

UC-EL-13-MT Kit

6mm - 30mm Tube

J&E Machines B.V.
Jacobus Lipsweg 100
NL-3316 BP Dordrecht

+31 (0) 78 617 98 39
info@jemachines.nl

IBAN: NL87INGB0662309022
BTW: NL809898329.B01

KvK: 24322318
www.jemachines.nl

UC-HL2 | 2" Launcher

- Cleans ⅛" through 2" hose, tube or pipe.
- Full Flow Quick Release Coupling and 360° Rotary Plug for proper air flow and non-fatigue operator use.
- Safety Release Bar locks faceplate into a closed position.
- Made of precision machined aluminum, and fully anodized for harsh environments and heavy use.
- Ideal for production hose, tube shops, mobile hose fabricators and job site applications due to simplistic design, size and portability.
- For kits contents, see chart Pages 12-13.

UC-HL-10-2 Kit

¼" - 2" (6mm - 50mm ID)

UC-HL-25-2-Kit

¼" - 2" (6mm - 50mm ID)

UC-HL-17-2MT Kit

6mm - 50mm Tube

UC-CAP Kit

¼" - 2" (6mm - 50mm ID)

Great starter kit for applications up to 2" ID!

UC-CAP-NH includes a UC-NH25 Nozzle Holder in place of the Carrying Case.

J&E Machines B.V.
Jacobus Lipsweg 100
NL-3316 BP Dordrecht

+31 (0) 78 617 98 39
info@jemachines.nl

IBAN: NL87INGB0662309022
BTW: NL809898329.B01

KvK: 24322318
www.jemachines.nl

UC-HL3.5 | 3½" Launcher

- Cleans ⅛" through 3½" hose, tube or pipe.
- Full Flow Quick Release Coupling and unique 360° Rotary Plug for proper air flow and non-fatigue operator use.
- Launcher requires a UC-AR2 adapter ring for nozzles ⅛" through 1¼" and a UC-AR3 for nozzles 1½" and 2". The unique UC-U55/90 Universal Nozzle 2⅛" through 3½" (55mm - 90mm ID) does not require an adapter ring.
- Made from precision machined aluminum and fully anodized for harsh environments and heavy use.
- Ideal for production hose and tube shops, mobile hose fabricators and job site applications because of its simplistic design, size and portability.
- For kit contents, see chart Pages 12-13.

UC-HL-1-3.5 Kit

2 ⅛"- 3½" (55mm - 90mm ID)

UC-HL4.5 | 4½" Launcher

- Cleans ⅛" through 4½" hose, tube or pipe.
- Includes UC-4.5LN aluminum locking nozzle.
- Supplied with a -8 SAE male flare and female swivel with ½" hose barb for correct SCFM air flow requirements.
- Capable of passing 50% more SCFM than our other launchers - extremely important for applications above 3½" and long lengths of hose, tube or pipe.
- Made of precision machined aluminum and fully anodized for harsh environments and heavy use.
- Ideal for job site applications because of its simplistic design, size and portability.
- Capable of cleaning ⅛" through 3½" when combined with our adapter rings and nozzles using the UC-LR locking ring in place of the UC-4.5LN locking nozzle.
- For kit contents, see chart Pages 12-13.

UC-HL-1-4.5 Kit

3½" - 4½" (90mm - 114mm ID)

J&E Machines B.V.
Jacobus Lipsweg 100
NL-3316 BP Dordrecht
+31 (0) 78 617 98 39
info@jemachines.nl
IBAN: NL87INGB0662309022
BTW: NL809898329.B01
KvK: 24322318
www.jemachines.nl

Launcher Kits

Part Number#	Description	UC-EL-8 ¼" - 1¼" (6mm - 32mm ID)	UC-EL-8-DP ¼" - 1¼" (6mm - 32mm ID)	UC-EL13-MT 6mm - 30mm Tube	UC-HL-10-2 ¼" - 2" (6mm - 50mm ID)	UC-HL-25-2 ¼" - 2" (6mm - 50mm ID)	UC-CAP ¼" - 2" (6mm - 50mm ID)	UC-CAP-NH ¼" - 2" (6mm - 50mm ID)	UC-HL-17-2MT 6mm - 50mm Tube	UC-HL-1-3.5 2⅛" - 3½" (55mm - 90mm ID)	UC-HL-1-4.5 3½" - 4½ (90mm - 114mm ID)
UC-CC	Carrying Case	✔	✔	✔	✔	✔	✔		✔	✔	
UC-S	FREE Launcher Stand	✔	✔	✔	✔	✔	✔	✔	✔	✔	✔
UC-NH25	Nozzle Holder							✔			
UC-EL1.25	1¼" (32mm) Economy Hand Held Launcher	✔	✔	✔							
UC-HL2	2" (50mm) Hand Held Launcher				✔	✔	✔	✔	✔		
UC-HL3.5	3½" (90mm) Hand Held Launcher									✔	
UC-HL4.5	4½" (114.3mm) Hand Held Launcher										✔
UC-AR1	Adapter Ring for UC-HL2 Launcher				✔	✔	✔	✔	✔		
UC-AR2	Adapter Ring for UC-HL3.5 Launcher									✔	✔
UC-AR3	Adapter Ring for UC-HL3.5 Launcher									✔	✔
UC-AH05	Hose Nozzle 5mm (3/16")	O	O	O	O	O	O	O	O	O	O
UC-H06	Hose Nozzle 6mm (¼")	✔	✔	O	✔	✔	✔	✔	O	O	O
UC-H08	Hose Nozzle 8mm (5/16")	✔	✔	O	✔	✔	✔	✔	O	O	O
UC-H10	Hose Nozzle 10mm (⅜")	✔	✔	O	✔	✔	✔	✔	O	O	O
UC-H13	Hose Nozzle 13mm (½")	✔	✔	O	✔	✔	✔	✔	O	O	O
UC-H16	Hose Nozzle 16mm (⅝")	✔	✔	O	✔	✔	✔	✔	O	O	O
UC-H19	Hose Nozzle 19mm (¾")	✔	✔	O	✔	✔	✔	✔	O	O	O
UC-H25	Hose Nozzle 25mm (1")	✔	✔	O	✔	✔	✔	✔	O	O	O
UC-H32	Hose Nozzle 32mm (1¼")	✔	✔	O	✔	✔	✔	✔	O	O	O
UC-H38	Hose Nozzle 38mm (1½")				✔	✔	✔	✔	O	O	O
UC-H50	Hose Nozzle 50mm (2")				✔	✔	✔	✔	O	O	O
UC-T03	Tube Nozzle 3mm (⅛")	O	O	O	O	✔	O	O	O	O	O
UC-J06	JIC Nozzle 6mm (¼")	O	O	O	O	✔	✔	✔	O	O	O
UC-T06	Tube Nozzle 6mm (¼")	O	O	O	O	✔	O	O	O	O	O
UC-T08	Tube Nozzle 8mm (5/16")	O	O	O	O	✔	O	O	O	O	O
UC-J10	JIC Nozzle 10mm (⅜")	O	O	O	O	✔	✔	✔	O	O	O
UC-T10	Tube Nozzle 10mm (⅜")	O	O	O	O	✔	O	O	O	O	O
UC-J13/T13	JIC/Tube Nozzle 13mm (½")	O	O	O	O	✔	✔	✔	O	O	O
UC-J16/T16	JIC/Tube Nozzle 16mm (⅝")	O	O	O	O	✔	✔	✔	O	O	O
UC-J19/T19	JIC/Tube Nozzle 19mm (¾")	O	O	O	O	✔	✔	✔	O	O	O

✔ = Included in Kit O = Optional

J&E Machines B.V.
Jacobus Lipsweg 100
NL-3316 BP Dordrecht
+31 (0) 78 617 98 39
info@jemachines.nl
IBAN: NL87INGB0662309022
BTW: NL809898329.B01
KvK: 24322318
www.jemachines.nl

Launcher Kits

Part Number#	Description	UC-EL-8 ¼" - 1¼" (6mm - 32mm ID)	UC-EL-8-DP ¼" - 1¼" (6mm - 32mm ID)	UC-EL13-MT 6mm - 30mm Tube	UC-HL-10-2 ¼" - 2" (6mm - 50mm ID)	UC-HL-25-2 ¼" - 2" (6mm - 50mm ID)	UC-CAP ¼" - 2" (6mm - 50mm ID)	UC-CAP-NH ¼" - 2" (6mm - 50mm ID)	UC-HL-17-2MT 6mm - 50mm Tube	UC-HL-1-3.5 2⅛" - 3½" (55mm - 90mm ID)	UC-HL-1-4.5 3½" - 4½ (90mm - 114mm ID)
UC-T32	Tube Nozzle 32mm (1¼")	O	O	O	O	✔	O	O	O	O	O
UC-J32/T25	JIC/Tube Nozzle 32/25mm (1¼" & 1")	O	O	O	O	✔	✔	✔	O	O	O
UC-J38/T38	JIC/Tube Nozzle 38mm (1½")				O	✔	✔	✔	O	O	O
UC-J50/T50	JIC/Tube Nozzle 50mm (2")				O	✔	✔	✔	O	O	O
UC-4FFORX	4 Flat Face O-Ring Style Nozzle 6mm (¼")	O	O	O	O	✔	✔	✔	O	O	O
UC-6X1.5	Tube Nozzle 6mm OD X 1.5mm Wall	O	O	✔	O	O	O	O	✔	O	O
UC-8X1.5	Tube Nozzle 8mm OD X 1.5mm Wall	O	O	✔	O	O	O	O	✔	O	O
UC-10X1.5	Tube Nozzle 10mm OD X 1.5mm Wall	O	O	✔	O	O	O	O	✔	O	O
UC-12X2.0	Tube Nozzle 12mm OD X 2.0mm Wall	O	O	✔	O	O	O	O	✔	O	O
UC-14X2.0	Tube Nozzle 14mm OD X 2.0mm Wall	O	O	✔	O	O	O	O	✔	O	O
UC-15X2.0	Tube Nozzle 15mm OD X 2.5mm Wall	O	O	✔	O	O	O	O	✔	O	O
UC-16X2.5	Tube Nozzle 16mm OD X 2.5mm Wall	O	O	✔	O	O	O	O	✔	O	O
UC-18X2.5	Tube Nozzle 18mm OD X 2.5mm Wall	O	O	✔	O	O	O	O	✔	O	O
UC-20X3.0	Tube Nozzle 20mm OD X 3.0mm Wall	O	O	✔	O	O	O	O	✔	O	O
UC-22X2.0	Tube Nozzle 22mm OD X 2.0mm Wall	O	O	✔	O	O	O	O	✔	O	O
UC-25X3.0	Tube Nozzle 25mm OD X 3.0mm Wall	O	O	✔	O	O	O	O	✔	O	O
UC-28X2.5	Tube Nozzle 28mm OD X 2.5mm Wall	O	O	✔	O	O	O	O	✔	O	O
UC-30X4.0	Tube Nozzle 30mm OD X 4.0mm Wall	O	O	✔	O	O	O	O	✔	O	O
UC-35X3.0	Tube Nozzle 35mm OD X 3.0mm Wall				O	O	O	O	✔	O	O
UC-38X5.0	Tube Nozzle 38mm OD X 5.0mm Wall				O	O	O	O	✔	O	O
UC-42X3.0	Tube Nozzle 42mm OD X 3.0mm Wall				O	O	O	O	✔	O	O
UC-50X6.0	Tube Nozzle 50mm OD X 6.0mm Wall				O	O	O	O	✔	O	O
UC-U55/90	Universal Nozzle 55mm/90mm (2⅛" - 3½")									✔	O
UC-LR	Locking Ring									✔	✔
UC-4.5LN	Alum Locking Nozzle 114.3mm (4½")										✔
UC-PC	Projectile Catcher Bucket	O	✔	O	O	O	✔	✔	O	O	O
UC-P1	UC Style Projectile Kit (11 bags) UC07 - UC40 (¼" - 1¼")	O	✔	O	O	O	O	O	O	O	O
UC-P2	UC Style Projectile Kit (13 bags) UC07 - UC60 (¼" - 2")				O	O	✔	✔	O	O	O

✔ = Included in Kit O = Optional

J&E Machines B.V.
Jacobus Lipsweg 100
NL-3316 BP Dordrecht
+31 (0) 78 617 98 39
info@jemachines.nl
IBAN: NL87INGB0662309022
BTW: NL809898329.B01
KvK: 24322318
www.jemachines.nl

Nozzles & Adapter Rings

A range of nozzles are available, allowing the Ultra Clean System to be used on different sizes and types of hose, tube and pipe, as well as coupling configurations. Custom nozzles can be designed upon request.

Hose Nozzles

The hose nozzle is inserted into the ID of the hose. Hose nozzles also work on pipe, heavy walled tubing and many coupling configurations. It is our most popular nozzle. Hose nozzles have the "UC-H" designation and are blue in color for easy identification.

Production Hose Nozzles

Production Hose Nozzles are aluminum with a hard coat blue anodized finish. They are available for hose sizes ¼" (6mm) through 1¼" (32mm). The primary application is production hose assembly cleaning when using a UC-BM1.25-G3 Bench Mount Launcher or the UC-CAL-MS Carousel Auto Loader.

UC-AH-Kit-BLUE

8 Aluminum Production Hose Nozzles ¼" thru 1¼".

Tube Nozzles (Nominal Inch)

Nominal inch tube nozzles have a stop on the inside that forms an airtight seal when the tube is fully inserted into the nozzle. Nominal inch tube nozzles are white in color and designated with a "UC-T" in the part number. Some "UC-T" nozzles may also be designated for JIC use as reflected in the part number.

The white JIC nozzles are molded with a special 37° male flare at the tip to fit the female JIC fittings on hose and tube assemblies. JIC nozzles are marked with the "UC-J" designation, followed by appropriate size.

Tube Nozzles (Metric)

Metric tube nozzles have a stop on the inside that forms an airtight seal when the tube is fully inserted into the nozzle. Metric tube nozzles are designed to match metric tubing, and are similarly based on outside diameter (OD) x wall thickness. Metric tube nozzle designations utilize the largest wall thickness for the given OD, but fit all smaller wall thicknesses as well. Metric tube nozzles are grey in color.

Custom Nozzles

Special nozzles are designed to accommodate various common fittings such as the –4 Flat Face O-Ring style (also referred to as "Face Seal," "Seal Lok," or "FFORX"), or the -6 FJIC style.

J&E Machines B.V.
Jacobus Lipsweg 100
NL-3316 BP Dordrecht
+31 (0) 78 617 98 39
info@jemachines.nl
IBAN: NL87INGB0662309022
BTW: NL809898329.B01
KvK: 24322318
www.jemachines.nl

Universal Nozzle

UC-U55/90: The Universal Nozzle is similar to our hose style nozzle. It has a size range 2⅛" - 3½" (55mm - 90mm). The Universal Nozzle can be cut off in10mm increments to suit your application.

Aluminum Locking Nozzle

UC-4.5LN: This nozzle is supplied with the UC-HL4.5 Launcher for 3½" - 4½" (90mm - 115mm) applications.

Sanitary Nozzles

Food-grade, stainless steel, tri-clamp sanitary nozzles for easy attachment to stainless steel tubing and hoses used in the food and beverage industry. Contact Ultra Clean to discuss specific needs and solutions.

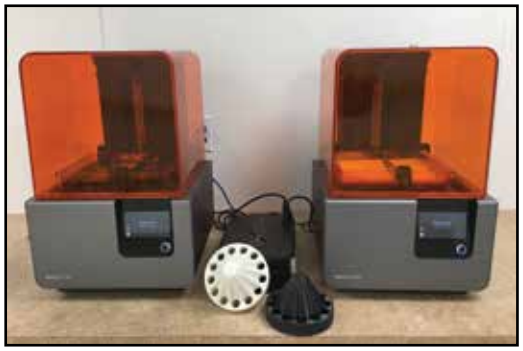

Prototype 3D-Printed Nozzles

Ultra Clean engineers will help you design a custom nozzle to your specifications, then print a high quality resin prototype unit on our cutting-edge 3D printer. If interested, ask us for details!

Adapter & Locking Rings

- UC-AR1 fits the UC-HL2 Launcher and all nozzle types from ⅛" - 1¼".
- UC-AR2 fits the UC-HL3.5 Launcher and all nozzle types from ⅛" through 1¼".
- UC-AR3 fits the UC-HL3.5 Launcher and all nozzle types from 1½" through 2".
- UC-LR fits the UC-HL3.5 & UC-HL4.5 Launchers and the AR2, AR3 & UC-U55/90 nozzles.

J&E Machines B.V.
Jacobus Lipsweg 100
NL-3316 BP Dordrecht

+31 (0) 78 617 98 39
info@jemachines.nl

IBAN: NL87INGB0662309022
BTW: NL809898329.B01

KvK: 24322318
www.jemachines.nl

Projectiles

Types & Applications

Projectiles clean when compressed against the internal surface of a hose, tube or pipe. Pressure is achieved as the projectile is approximately 20% to 30% larger than the internal diameter of the hose, tube or pipe. For instance, a 2" (50mm) projectile is recommended for a 1½" (38mm) hose. Individual circumstances may require a smaller or larger projectile. If too large it will not leave the nozzle, but if too small it will not clean effectively.

The enormous variety in types of couplings available today could render a recommended size inappropriate. When cleaning assemblies, a reduction in projectile size may be appropriate, as all recommendations are based on the most commonly used coupling sizes. Custom projectiles can also be developed.

All Ultra Clean Projectiles are made from virgin materials with a specific cell structure and density. This ensures a quality product capable of achieving most ISO-4406-99 and ISO-4405 cleanliness levels when our cleaning procedures are followed. Ultra Clean never uses rebonded, scrap or recycled materials in our projectiles like some other manufacturers.

Ultra Clean

Universal application for use with hose, tube, pipe and assemblies. Removes fine particles of loose contamination and can also be used for product purging.

Size range: 2mm - 95mm.

Tube

For use with all types of tubing or pipes. Strongly recommended for stainless steel with mild to medium amounts of contamination, surface rust or scale build-up. Removes mandrel lubricants, grease and oil after the bending process.

Size range: 6mm - 65mm.

Abrasive

For use with tubes or pipes to loosen mild to medium amounts of contamination, surface rust or scale build-up. Always follow-up with an Ultra Clean projectile to clear away loosened contaminants and verify cleanliness. Can be used multiple times.

Size range: 6mm - 120mm.

Ultra Scrub

For use on wet or dry applications of tubes or pipes to loosen medium to high amounts of contamination surface rust or scale build-up. Also navigates assemblies with sweeping bends or elbows.Always follow-up with an Ultra Clean projectile to clear loosened contaminants and verify cleanliness. Can be used multiple times.

Size range: 6mm - 60 mm.

Ultra Clean 100mm-150mm

Ultra Clean Projectiles 100mm and larger are provided with a laminated backer to prevent air permeation. The laminated backer should be loaded into the nozzle last so that the air is pushing against it.

Bulk Projectiles

Ultra Clean Technologies also offers Ultra Clean & Tube style projectiles packaged in bulk quantities. The bulk projectile program complements the Bench Mount Launchers for use in a production type atmosphere.

J&E Machines B.V.
Jacobus Lipsweg 100
NL-3316 BP Dordrecht
+31 (0) 78 617 98 39
info@jemachines.nl
IBAN: NL87INGB0662309022
BTW: NL809898329.B01
KvK: 24322318
www.jemachines.nl

Projectile Kits

UC-P1-Projectile Kit

Includes:

- 11 bags of Ultra Clean Projectiles for cleaning out hose, tube and pipe applications up to ¼" to 1¼" ID.
- These projectiles also form a sub-kit that is included in the UC-EL8-DP Economy Launcher Kit.

UC-P2-Projectile Kit

Includes:

- 13 bags of Ultra Clean Projectiles for cleaning out hose, tube and pipe applications up to ¼" to 2" ID.
- These projectiles also form a sub-kit that is included in the UC-CAP 2" Starter Kit.

Note: All projectile sizes are also available in bulk quantities. Ask your sales rep or call for details.

Projectiles Chart

Included in UC-P1-Projectile Kit.
Included in UC-P2-Projectile Kit.

Projectile Size	Bagged Qty	UC Style Medium Density	Tube Style High Density	*Abrasive	*Scrub
2mm	100	UC02	N/A	N/A	N/A
3mm	100	UC03	N/A	N/A	N/A
4mm	100	UC04	N/A	N/A	N/A
5mm	100	UC05	N/A	N/A	N/A
6mm	100	UC06	UC06-TE	UC-A06	UC-SCR06
7mm	100	UC07	UC07-TE	UC-A07	UC-SCR07
8mm	100	UC08	UC08-TE	N/A	UC-SCR08
10mm	100	UC10	UC10-TE	UC-A10	UC-SCR10
12mm	100	UC12	UC12-TE	UC-A12	UC-SCR12
14mm	100	UC14	UC14-TE	UC-A14	UC-SCR14
16mm	100	UC16	UC16-TE	UC-A16	UC-SCR16
18mm	100	UC18	UC18-TE	UC-A18	UC-SCR18
20mm	50	UC20	UC20-TE	UC-A20	UC-SCR20
22mm	50	UC22	UC22-TE	UC-A22	UC-SCR22
24mm	50	UC24	UC24-TE	UC-A24	UC-SCR24
26mm	50	UC26	UC26-TE	UC-A26	UC-SCR26
28mm	40	UC28	UC28-TE	UC-A28	UC-SCR28
30mm	40	UC30	UC30-TE	UC-A30	UC-SCR30
33mm	40	UC33	UC33-TE	UC-A33	UC-SCR33
36mm	30	UC36	UC36-TE	UC-A36	UC-SCR36
40mm	30	UC40	UC40-TE	UC-A40	UC-SCR40
45mm	20	UC45	UC45-TE	UC-A45	UC-SCR45
50mm	20	UC50	UC50-TE	UC-A50	UC-SCR50
55mm	15	UC55	UC55-TE	UC-A55	UC-SCR55
60mm	15	UC60	UC60-TE	UC-A60	UC-SCR60
65mm	10	UC65	UC65-TE	UC-A65	N/A
70mm	10	UC70	N/A	UC-A70	N/A
75mm	10	UC75	N/A	UC-A75	N/A
80mm	10	UC80	N/A	UC-A80	N/A
85mm	10	UC85	N/A	UC-A85	N/A
90mm	10	UC90	N/A	UC-A90	N/A
95mm	10	UC95	N/A	UC-A95	N/A
100mm	10	UC100	N/A	UC-A100	N/A
110mm	10	UC110	N/A	UC-A110	N/A
120mm	10	UC120	N/A	S/O	N/A
130mm	10	UC130	N/A	S/O	N/A
140mm	10	UC140	N/A	S/O	N/A
150mm	10	UC150	N/A	S/O	N/A

N/A = Not available
S/O = Special order

*Not to be used with UC-BM1.25-G3 or UC-CAL-MS production launcher.

J&E Machines B.V.
Jacobus Lipsweg 100
NL-3316 BP Dordrecht
+31 (0) 78 617 98 39
info@jemachines.nl
IBAN: NL87INGB0662309022
BTW: NL809898329.B01
KvK: 24322318
www.jemachines.nl

Accessories

UC-S Launcher Stand *An essential piece of equipment!*

- Acts as an anchor when operator needs both hands to lift hose to the nozzle.
- Prevents damage to launcher or nozzles, caused when dropped or by rough handling during routine work processes (Note: Rough handling or abuse voids all warranties).
- Provides safe, permanent storage.
- Launcher is always ready for hose, tube and pipe cleaning requirements.

The Launcher stand should be conveniently located for easy access when the operator needs two hands to lift the work and where he can easily pick it up and put it back down again. Many operators use the launcher stand as a permanent storage device for the launcher, rather than continually removing the launcher from the carrying case.

UC-PC Projectile Catcher Bucket

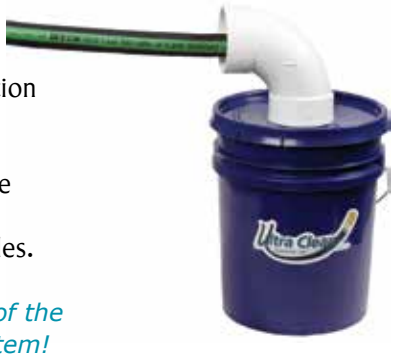

- Prevent injury to yourself, a customer or an innocent bystander should contamination (such as steel slivers, or fragments of wire) be forcefully propelled, along with the projectile from inside the hose, tube or pipe.
- Allows you to catch and visually ascertain the contamination itself, expelled by the projectile from the hose, tube or pipe.
- Ascertain internal condition of the hose, tube or pipe by inspecting spent projectiles.
- Maintain a clean and professional work space.
- Saves time, energy and cleaning costs by eliminating mess.
- Locate in clean, practical position.

An integral part of the Ultra Clean System!

Quick Connects *Full-flow connections which are perfect for air supply manifolds!*

	• Size: ¼" MNPT x Quick Connect, Part Number: UC-QRCP • Size: ⅜" MNPT x Quick Connect, Part Number: UC-QRC-30PM • Size: ½" MNPT x Quick Connect, Part Number: UC-QRC-40PM
	• Allows for 360° swivelling! • Fits at 45° angle to reduce operator fatigue • Size: ¼" MNPT by Male Quick Connect • Part Number: UC-QRC-RP
	• Excellent general purpose coupling for connecting factory air supply to pneumatic tools • Size: ½" hose barb by Female quick-disconnect • Part Number: UC-QRC-C

UC-NH25 Nozzle Holder

A great alternative to leaving your nozzles in the carry case. It can be attached to a workbench and offers these additional advantages:

- Easy access during operation.
- Keeps nozzles and system visible, reminding workers of cleaning procedures.
- Becomes a promotional feature for customers.
- Accommodates ¼" through 2" nozzles.

J&E Machines B.V.
Jacobus Lipsweg 100
NL-3316 BP Dordrecht
+31 (0) 78 617 98 39
info@jemachines.nl
IBAN: NL87INGB0662309022
BTW: NL809898329.B01
KvK: 24322318
www.jemachines.nl

UC-D1 Super-Dry Compressed Air Dryer

Contains two highly efficient polypropylene coalescer elements at inlet and outlet ports to absorb oil and all solid air particles. Also included, one desiccant bag specifically designed to absorb water vapors and humidity from your compressed air system. The clean, dry air provided by the Super-Dry Compressed Air Dryer is highly recommended for use with the Ultra Clean Bench Mount Launcher, Projectile Verification System and AutoLoader System.

Clean, dry air is absolutely necessary when using Ultra Clean's Bench Mount Launcher, Projectile Verification System, and the AutoLoader featured on the following "Production Equipment" pages.

Standard Features & Benefits

Housings for Flows up to 300 SCFM

- Heavy duty aluminum casting for high durability and corrosion resistance.
- Powder coated exterior for added durability.
- V-band stainless steel clamps for easy removal of cartridge replacement covers.
- Optimized air flow through housing minimizes pressure drop.
- Wall mounting brackets included.
- 3 stages in one unit; separation, filtration and drying.

Enhanced Performance

- Easy replaceable self-contained desiccant cartridges.
- High efficiency polypropylene coalescent elements.
- Optimum filter efficiency even at low air flows.
- 10-year manufacturer's warranty.
- Life expectancy: 25 years.
- Pressure dew point: -40° F.
- Maximum working pressure: 150 PSIG.

UC-D1 Super-Dry Compressed Air Dryer

- Air Flow @ 100 PSID: 70 scfm.
- Inlet/Outlet NPT: 1".
- Dimensions: 6" w, 19" h.
- Weight: 20 lbs.
- Replacement Kit: UC-ED1.
- Maximum inlet temp: 100° F (38° C).
- Maximum inlet pressure: 150 PSIG.

Premium Options

Humidity & Temperature Indicator UC-HGT

- Indicates optimum cartridge replacement based on % relative humidity.
- Relative Humidity % 10-80.
- Temperature °F: 20-100.
- Connection NPT: ¼.

Automatic Timer Drain UC-TD

- Efficient drainage of condensate.
- Extends cartridge life of the dryer.
- Interval Time min.: 0.5 - 45.
- Discharge Time sec.: 0.5 - 10.
- In & Out Ports NPT: ¼.

Ball Valve Strainer UC-BVS

- Isolates and protects drain.
- Inlet Port NPT: ½.
- Outlet Port NPT: ¼.
- Material: Brass.

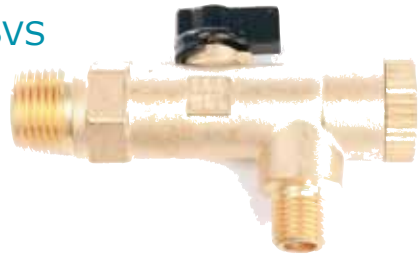

J&E Machines B.V.
Jacobus Lipsweg 100
NL-3316 BP Dordrecht
+31 (0) 78 617 98 39
info@jemachines.nl
IBAN: NL87INGB0662309022
BTW: NL809898329.B01
KvK: 24322318
www.jemachines.nl

Production Equipment

Our production equipment is built specifically to keep pace with busy, high-volume production environments, while providing the same exceptional results you've come to expect from Ultra Clean in hose, tube and pipe cleaning and contamination removal.

Bench Mount Launcher, Projectile Verification System (PVS) & AutoLoader

- Manual and automated equipment for hose or tube assembly production lines.
- Increased production speed.
- Reduced cost.
- Reduction of unnecessary air consumption.
- Easily incorporates into existing production environment
- Easy to operate.
- Electronically controlled.

Air Requirements for Production Equipment

- 80 PSI (5.5 Bar) minimum to 110 PSI (7.5 Bar) maximum.
- ½" ID air hose to ensure 38 SCFM (1.1 m^3/min) at 80 PSI (5.5 Bar) air flow.
- Large industrial compressor strongly recommended.
- UC-D1 Super-Dry Compressed Air Dryer strongly recommended, see **Page 19.**

UC-BM1.25-G3
1¼" Bench Mount Launcher

- Capable of cleaning 3⁄16" - 1¼" hose, tube or pipe.
- Easy manual projectile loading.
- Supplied with a 5 micron air filter, pneumatic foot switch with twin line air hose and your choice of 8 hose or tube nozzles 3⁄16" - 1¼" (5mm - 32mm ID).
- Effortless to operate with a cycle time of 1.2 seconds.
- Ideal for production type environments due to speed, simplicity and longevity.
- Stainless steel housing with anodized aluminum internal components.
- Works as stand-alone unit or in conjunction with the UC-PVS-G4 Projectile Verification System.
- Debris door to keep launcher chamber clean when not in use.

UC-BM-HH
Hand Held Launcher Extension

- Pneumatic hand held launcher specially designed for use with the UC-BM1.25-G3 Bench Mount.
- Standard 6' extension hose provides added mobility, allowing user to easily take a hand held launcher directly to a hose or tube assembly.
- Easily attaches to front of launcher, no tools required.
- Air requirements same as for the Bench Mount unit.

Part Number#	Compatible UC Projectile Sizes
UC-BM-HH-3/4"	UC07, UC08, UC10, UC12, UC14, UC16, UC18, UC20, UC22, UC24, UC26

J&E Machines B.V.
Jacobus Lipsweg 100
NL-3316 BP Dordrecht
+31 (0) 78 617 98 39
info@jemachines.nl
IBAN: NL87INGB0662309022
BTW: NL809898329.B01
KvK: 24322318
www.jemachines.nl

UC-PVS-G4
Projectile Verification System

Guarantees a projectile is never left inside a hose or tube that has been cleaned!

Air supply for Hand Held Launcher located on right side of control station

UC-PVS-G4 Control Station

The UC-CB Containment Barrel must be used with, and is included with, the UC-PVS-G4 Projectile Verification System.

- PLC/HMI Touchscreen for intuitive navigation and set-up in multiple languages.
- (3) Three Cleaning Modes with time-adjustable air blow.
- Power cable converts 240V AC (Europe) or 110V AC to 24V DC.
- Capable of capturing/transferring data such as projectile counts and faults, via a USB port to ensure no projectile is left inside a cleaned hose or tube
- Remote monitoring.
- Green Light on Containment Barrel goes on and air blow automatically stops when cleaning process is complete and projectile verified.
- Electronic foot switch activates the firing sequence of the UC-BM1.25-G3 (3⁄16" - 1¼") Bench Mount Launcher.
- The UC-HL-PVS (3⁄16"– 2") Electronic Hand Held Launcher can be fired by a built-in electronic trigger.
- Air supply for Hand Held Launcher is conveniently located on the right side of the control station.

5 Micron Filter, Regulator, Gauge (on top of control station)

- Requires Ultra Clean UC-QRC-C quick disconnect coupling and ½" I.D. (13mm) air hose to ensure correct SCFM air requirements for the Control Station.
- Incoming air is filtered to 5 micron.
- Regulator and gauge adjustment helps ensure proper operating pressure.

Containment Barrel Connector & Foot Switch (on back of control station)

- 8-pin military-style plug secures the Containment Barrel cord to the Control Station.
- Electric Foot Switch provides hands-free operation to trigger the firing process. Pressure of 80 to 110 PSI maximum (5.5 to 7.5 Bar).

Required for Operation

UC-BM1.25-G3 ¼" - 1¼" Bench Mount Unit

AND/OR

UC-HL-PVS ¼" - 2" Hand Held Launcher

- Electronic hand held launcher (¼"– 2") specifically designed for use with PVS control station.
- Fired by a built-in electronic trigger.

J&E Machines B.V.
Jacobus Lipsweg 100
NL-3316 BP Dordrecht
+31 (0) 78 617 98 39
info@jemachines.nl
IBAN: NL87INGB0662309022
BTW: NL809898329.B01
KvK: 24322318
www.jemachines.nl

UC-CAL-MS Carousel AutoLoader

The UC-CB Containment Barrel must be used with, and is included with, the UC-CAL-MS Carousel Autoloader.

Easily accomodates optional UC-CAL-Mark marking system!
See next page.

- Automatic projectile loading, firing, and verification.
- Removes internal contamination from hoses, tubes or pipes quickly and efficiently in a production environment.
- Ideal for high volume production cells making hose or tube assemblies.
- Fully integrates into automated tube manufacturing processes.
- Verifies projectile has exited hose, tube or pipe and entered Containment Barrel along with expelled contamination.
- Cleans hoses, tubes and pipes with an internal diameter of ¼" - 1" (6mm - 25mm).
- Nine (9) Hopper Box options, each handling one projectile size from 7mm to 33mm.
- Foot pedal or hand held firing device options.
- Automatically connects 110V AC-60Hz or 240V AC-50Hz to 24V DC with included electrical cord for easy install.
- PLC/HMI Touchscreen guides operator through set-up and cleaning process.
- Projectile Counter for counting fired and verified projectiles.
- Containment Barrel has a stainless steel chute assembly with green, yellow and red lights to indicate system and projectile mode (ready, firing, verified).
- 5 Micron Filter Regulator and Gauge for setting operating pressure at between 80 to 110 PSI (5.5 to 7.5 Bar).
- Requires clean, dry air for which the UC-D1 Super-Dry Compressed Air Dryer is strongly recommended.

Hopper Boxes

- Quick change.
- Clean projectile loading and storage.
- Hopper boxes ordered separately based on projectile size (7mm-33mm).
- Stainless steel construction.
- Static control with built-in air ionization.
- Includes safety sensor to stop system and carousel functions until lid is closed.
- Laser-marked for easy identification.

Part Number#	Projectile Sizes in mm *Compatible with UC and Tube Projectiles only*
UC-HB-07	07
UC HB-10	08, 10
UC-HB-12	12
UC-HB-14	14
UC-HB-16	16
UC-HB-18	18
UC-HB-22	20, 22
UC-HB-26	24, 26
UC-HB-33	28, 30, 33

J&E Machines B.V.
Jacobus Lipsweg 100
NL-3316 BP Dordrecht
+31 (0) 78 617 98 39
info@jemachines.nl
IBAN: NL87INGB0662309022
BTW: NL809898329.B01
KvK: 24322318
www.jemachines.nl

UC-CAL-MARK
Marking System for UC-CAL-MS Carousel AutoLoader

- Marking system attaches to front of UC-CAL-MS.
- Adjustable X and Y axis to precisely place an indicator mark on O.D. of application.
- Mark ensures proper stem depth insertion.
- May also be used for color-coding purposes such as indication of production years.
- Marking indicates that hose is cleaned and projectile is verified.

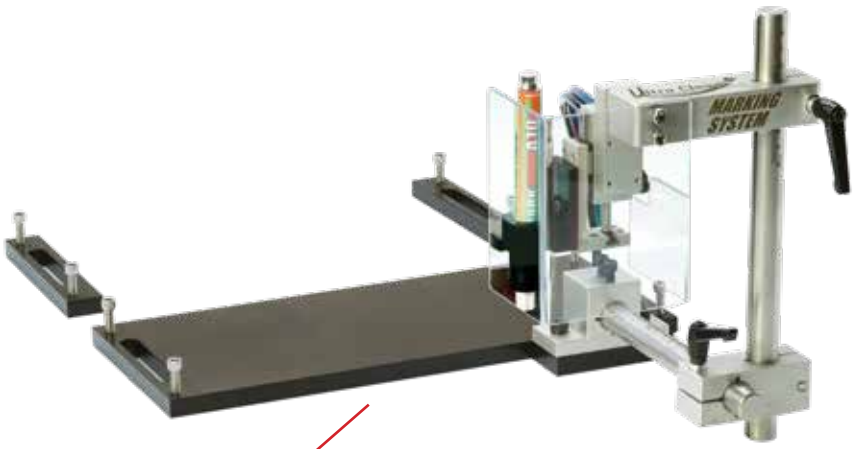

UC-CAL-MARK in place on
UC-CAL-MS Carousel AutoLoader

Order the optional UC-CAL-Mark with your UC-CAL-MS to get the most out of your Carousel AutoLoader!

UC-CAL-HH
Hand Held Launcher

- Optional hand held launcher for use when the marking system is disconnected.
- Electronic hand held launcher specifically designed for use with UC-CAL-MS.
- Standard 6' extension hose/cable provided added mobility, allowing user to easily take a hand held launcher directly to a hose or tube assembly.
- Three sizes available to handle various hose I.D. sizes: ½", ⅝",¾".

Part Number#	Projectile Sizes in mm *Compatible with UC and Tube Projectiles only*
UC-CAL-HH-1/2"	07, 08, 10, 12, 14
UC-CAL-HH-5/8"	07, 08, 10, 12, 14, 16, 18, 20, 22
UC-CAL-HH-3/4"	07, 08, 10, 12, 14, 16, 18, 20, 22, 24, 26, 28, 30

J&E Machines B.V.
Jacobus Lipsweg 100
NL-3316 BP Dordrecht
+31 (0) 78 617 98 39
info@jemachines.nl
IBAN: NL87INGB0662309022
BTW: NL809898329.B01
KvK: 24322318
www.jemachines.nl

Marking Systems Accessories

UC-MARK-ACC

Included with every UC-CAL-MARK system.

The Marking System includes:

- Tips.
- Holder.
- Allen Wrench.
- Full Set Color Markers (1 box per color).

UC-MARK

Markers for UC-CAL-MS Marking System.

- High quality paint-like markers.
- Available in four bright colors that can be easily seen on hoses.
- Wear, fade and bleed-resistant.
- Tight, secure, color-coded caps.
- Custom holder included with each marker to position upright when not in use.

UC-MARK-BLUE-BOX (qty: 12)
UC-MARK-RED-BOX (qty: 12)
UC-MARK-WHITE-BOX (qty: 12)
UC-MARK-YELLOW-BOX (qty: 12)

Production Equipment Accessory

UC-CB CONTAINMENT BARREL

- Catches and verifies that projectile and contamination have been expelled.
- Includes a wheeled dolly for ease of use.
- Large filter allows compressed air to escape while retaining contamination residue.
- Built-in sight gauge indicates when system needs emptying.
- Indicator lights signify at which stage system is operating.

Green = ready to launch projectile and/or has verified a caught projectile.

Y*ellow* blinking = projectile has been fired and is in process in hose or tube.

Red = projectile not verified and may still be in the hose or launcher.

Comes standard with.....

UC-PVS-G4 Projectile Verification System
UC-CAL-MS Carousel AutoLoader

J&E Machines B.V.
Jacobus Lipsweg 100
NL-3316 BP Dordrecht
+31 (0) 78 617 98 39
info@jemachines.nl
IBAN: NL87INGB0662309022
BTW: NL809898329.B01
KvK: 24322318
www.jemachines.nl

Production Equipment Compatibility

Our production equipment keeps pace with busy, high-volume production environments!

Product Compatibility UC-BM1.25-G3 and UC-PVS-G4	Cleaning ¼" to ¾"	Cleaning ¼" to 1-¼"	Cleaning ¼" to 2"	Projectile Verification	Data Logging/ Projectile Counting	Multiple Cleaning Modes	Automatic Loading	Assembly Marking
UC-BM1.25-G3	✔	✔	X	X	X	X	X	X
UC-BM1.25-G3 with UC-BM-HH-3/4"	✔	X	X	X	X	X	X	X
UC-PVS-G4 with UC-BM-1.25-G3	✔	✔	X	✔	✔	✔	X	X
UC-PVS-G4 with UC-HL-PVS	✔	✔	✔	✔	✔	✔	X	X

Product Compatibility UC-CAL-MS	Cleaning ¼" to ½"	Cleaning ¼" to ⅝"	Cleaning ¼" to ¾"	Cleaning ¼" to 1"	Projectile Verification	Data Logging/ Projectile Counting	Multiple Cleaning Modes	Automatic Loading	Assembly Marking
UC-CAL-MS	✔	✔	✔	✔	✔	✔	✔	✔	✔
UC-CAL-MS with UC-CAL-HH-1/2"	✔	X	X	X	✔	✔	✔	✔	X
UC-CAL-MS with UC-CAL-HH-5/8"	✔	✔	X	X	✔	✔	✔	✔	X
UC-CAL-MS with UC-CAL-HH-3/4"	✔	✔	✔	X	✔	✔	✔	✔	X

✔ = Capable X = NOT Capable

J&E Machines B.V.
Jacobus Lipsweg 100
NL-3316 BP Dordrecht
+31 (0) 78 617 98 39
info@jemachines.nl
IBAN: NL87INGB0662309022
BTW: NL809898329.B01
KvK: 24322318
www.jemachines.nl

Recommended Sizing Chart

Hose**			
Hose ID		Nozzle	UC Projectile
Nom. In.	DN MM		
3/16"	5	UC-AH05-BLUE	UC06
¼"	6	UC-H06	UC10 or UC12
5/16"	8	UC-H08	UC12 or UC14
⅜"	10	UC-H10	UC14 or UC16
½"	13	UC-H13	UC18 or UC20
5/8"	16	UC-H16	UC22
¾"	19	UC-H19	UC26
1"	25	UC-H25	UC33 or UC36
1¼"	32	UC-H32	UC40 or UC45
1½"	38	UC-H38	UC50 or UC55
2"	50	UC-H50	UC60 or UC65
2½"	63	UC-U55/90	UC75
3"	76	UC-U55/90	UC85
3½"	89	UC-U55/90	UC100
4"	102	UC-4.5LN	UC120
4½"	114	UC-4.5LN	UC130

**Use larger recommended Ultra Clean Projectiles when cutting hose with an abrasive wheel. The above sizes are recommendations. Due to different manufacturers, types of fittings, and the amount of contamination in the line, the size projectile may need to be adjusted.

ASSY w/FJIC		
FJIC Size Dash	Nozzle	UC Projectile
-4	UC-J06	UC06 or UC07
-6	UC-J10	UC12
-8	UC-J13/T13	UC16
-10	UC-J16/T16	UC22
-12	UC-J19/T19	UC26
-16	UC-J25/T22	UC33
-20	UC-J32/T25	UC40
-24	UC-J38/T38	UC50
-32	UC-J50/T50	UC60

ASSY w/FFORX		
FFORX Size Dash	Nozzle	UC Projectile
-4	UC-4FFORX	UC06 *or* UC07
-6	UC-H06	UC12
-8	UC-H10	UC16
-10	UC-H13	UC22
-12	UC-H16	UC26
-16	UC-H19	UC33
-20	UC-H25	UC40

ASSY w/CODE 61 & 62 Flanges		
Flange Size Dash	Nozzle	UC Projectile
-8	UC-H10	UC16
-10	UC-H13	UC22
-12	UC-H16	UC26
-16	UC-H19	UC33
-20	UC-H25	UC40
-24	UC-H32	UC50
-32	UC-H38	UC60

J&E Machines B.V.
Jacobus Lipsweg 100
NL-3316 BP Dordrecht
+31 (0) 78 617 98 39
info@jemachines.nl
IBAN: NL87INGB0662309022
BTW: NL809898329.B01
KvK: 24322318
www.jemachines.nl

*Tube Sizing Chart - Nominal Inch

OD X Wall	Nozzle	Projectile Type			
		UC	Tube	Abrasive	Scrub
⅛" X .030"	UC-T03	UC04	--	--	--
¼" X .028"	UC-T06	UC08	UC07-TE	UC-A07	UC-SCR07
¼" X .035"	UC-T06	UC08	UC07-TE	UC-A07	UC-SCR07
¼" X .049"	UC-T06	UC08	UC06-TE	UC-A07	UC-SCR06
¼" X .065"	UC-T06	UC07	UC06-TE	--	UC-SCR06
5/16" X .028"	UC-T08	UC12	UC10-TE	UC-A10	UC-SCR10
5/16" X .035"	UC-T08	UC12	UC07-TE	UC-A10	UC-SCR07
⅜" X .028"	UC-T10	UC14	UC10-TE	UC-A12	UC-SCR10
⅜" X .035" -.049"	UC-T10	UC14	UC10-TE	UC-A12	UC-SCR10
⅜" X .065"	UC-T10	UC12	UC10-TE	UC-A10	UC-SCR10
½" X .035"	UC-J13/T13	UC16	UC14-TE	UC-A16	UC-SCR14
½" X .049"	UC-J13/T13	UC16	UC12-TE	UC-A16	UC-SCR12
½" X .065"	UC-J13/T13	UC16	UC12-TE	UC-A14	UC-SCR12
½" X .083"	UC-J13/T13	UC14	UC12-TE	UC-A12	UC-SCR12
5/8" X .049"	UC-J16/T16	UC22	UC16-TE	UC-A20	UC-SCR16
5/8" X .065"	UC-J16/T16	UC20	UC16-TE	UC-A18	UC-SCR16
5/8" X .083"	UC-J16/T16	UC20	UC14-TE	UC-A18	UC-SCR14
¾" X .049 -.065"	UC-J19/T19	UC26	UC20-TE	UC-A24	UC-SCR20
¾" X .095"	UC-J19/T19	UC22	UC18-TE	UC-A20	UC-SCR18
7/8" X .049"	UC-J25/T22	UC33	UC26-TE	UC-A30	UC-SCR26
7/8" X .065"	UC-J25/T22	UC30	UC22-TE	UC-A28	UC-SCR22
7/8" X .095"	UC-H16	UC28	UC22-TE	UC-A26	UC-SCR22
1" X .065"	UC-J32/T25	UC33	UC28-TE	UC-A30	UC-SCR28
1" X .083"-.095"	UC-J32/T25	UC33	UC26-TE	UC-A30	UC-SCR26
1" X .120"	UC-J32/T25	UC30	UC26-TE	UC-A28	UC-SCR26
1¼" X .065"	UC-T32	UC40	UC33-TE	UC-A40	UC-SCR33
1¼" X .083"	UC-T32	UC40	UC33-TE	UC-A36	UC-SCR33
1¼" X .095"	UC-T32	UC40	UC33-TE	UC-A36	UC-SCR33
1¼" X .109"	UC-T32	UC36	UC33-TE	UC-A36	UC-SCR33
1¼" X .120"	UC-T32	UC36	UC33-TE	UC-A33	UC-SCR33
1½" X .065"-.120"	UC-J38/T38	UC50	UC40-TE	UC-A45	UC-SCR40
1½ X .134"-.148"	UC-J38/T38	UC45	UC40-TE	UC-A40	UC-SCR40
2" X .065"-.120"	UC-J50/T50	UC60	UC50-TE	UC-A55	UC-SCR50
2" X .134"-.188"	UC-J50/T50	UC55	UC50-TE	UC-A50	UC-SCR50

J&E Machines B.V.
Jacobus Lipsweg 100
NL-3316 BP Dordrecht
+31 (0) 78 617 98 39
info@jemachines.nl
IBAN: NL87INGB0662309022
BTW: NL809898329.B01
KvK: 24322318
www.jemachines.nl

*Tube Sizing Chart - Metric

OD X Wall	Nozzle	Projectile Type			
		UC	Tube	Abrasive	Scrub
3 X .5	UC-T03	UC04	--	--	--
3 X .7	UC-T03	UC03	--	--	--
6 X 1.0	UC-6X1.5	UC07	UC06-TE	UC-A06	UC-SCR06
6 X 1.5	UC-6X1.5	UC07	--	UC-A06	--
8 X 1.0	UC-8X1.5	UC10	UC07-TE	UC-A07	UC-SCR07
8 X 1.5	UC-8X1.5	UC10	UC07-TE	UC-A07	UC-SCR07
10 X 1.0	UC-10X1.5	UC14	UC12-TE	UC-A12	UC-SCR12
10 X 1.5	UC-10X1.5	UC14	UC12-TE	UC-A12	UC-SCR12
12 X 1.0	UC-12X2.0	UC16	UC14-TE	UC-A14	UC-SCR14
12 X 1.5	UC-12X2.0	UC16	UC14-TE	UC-A14	UC-SCR14
12 X 2.0	UC-12X2.0	UC14	UC12-TE	UC-A12	UC-SCR12
14 X 1.0	UC-14X2.0	UC18	UC16-TE	UC-A16	UC-SCR16
14 X 1.5	UC-14X2.0	UC16	UC14-TE	UC-A14	UC-SCR14
14 X 2.0	UC-14X2.0	UC16	UC14-TE	UC-A14	UC-SCR14
15 X 1.0	UC-15X2.0	UC20	UC16-TE	UC-A18	UC-SCR16
15 X 1.5	UC-15X2.0	UC18	UC16-TE	UC-A16	UC-SCR16
15 X 2.0	UC-15X2.0	UC16	UC14-TE	UC-A14	UC-SCR14
16 X 1.0	UC-16X2.5	UC22	UC18-TE	UC-A20	UC-SCR18
16 X 1.5	UC-16X2.5	UC20	UC16-TE	UC-A18	UC-SCR16
16 X 2.0	UC-16X2.5	UC18	UC16-TE	UC-A16	UC-SCR16
16 X 2.5	UC-16X2.5	UC16	UC14-TE	UC-A14	UC-SCR14
18 X 1.0	UC-18X2.5	UC24	UC20-TE	UC-A22	UC-SCR20
18 X 1.5	UC-18X2.5	UC24	UC18-TE	UC-A20	UC-SCR18
18 X 2.0	UC-18X2.5	UC22	UC18-TE	UC-A20	UC-SCR18
18 X 2.5	UC-18X2.5	UC20	UC16-TE	UC-A18	UC-SCR16
20 X 1.5	UC-20X3.0	UC26	UC22-TE	UC-A24	UC-SCR22
20 X 2.0	UC-20X3.0	UC24	UC20-TE	UC-A22	UC-SCR20

J&E Machines B.V.
Jacobus Lipsweg 100
NL-3316 BP Dordrecht
+31 (0) 78 617 98 39
info@jemachines.nl
IBAN: NL87INGB0662309022
BTW: NL809898329.B01
KvK: 24322318
www.jemachines.nl

*Tube Sizing Chart - Metric

OD X WALL	NOZZLE	PROJECTILE TYPE			
		UC	TUBE	ABRASIVE	SCRUB
20 X 2.5	UC-20X3.0	UC24	UC18-TE	UC-A20	UC-SCR18
20 X 3.0	UC-20X3.0	UC22	UC18-TE	UC-A20	UC-SCR18
22 X 1.0	UC-22X2.0	UC30	UC26-TE	UC-A28	UC-SCR26
22 X 1.5	UC-22X2.0	UC30	UC26-TE	UC-A28	UC-SCR26
22 X 2.0	UC-22X2.0	UC30	UC26-TE	UC-A28	UC-SCR26
25 X 2.0	UC-25X3.0	UC33	UC28-TE	UC-A30	UC-SCR28
25 X 2.5	UC-25X3.0	UC30	UC26-TE	UC-A28	UC-SCR26
25 X 3.0	UC-25X3.0	UC30	UC26-TE	UC-A28	UC-SCR26
28 X 2.0	UC-28X2.5	UC36	UC33-TE	UC-A33	UC-SCR33
28 X 2.5	UC-28X2.5	UC36	UC30-TE	UC-A33	UC-SCR30
30 X 2.0	UC-30X4.0	UC36	UC33-TE	UC-A33	UC-SCR33
30 X 2.5	UC-30X4.0	UC36	UC30-TE	UC-A33	UC-SCR30
30 X 3.0	UC-30X4.0	UC36	UC30-TE	UC-A33	UC-SCR30
30 X 4.0	UC-30X4.0	UC36	UC30-TE	UC-A33	UC-SCR30
35 X 2.0	UC-35X3.0	UC45	UC40-TE	UC-A40	UC-SCR40
35 X 3.0	UC-35X3.0	UC40	UC36-TE	UC-A36	UC-SCR36
35 X 4.0	UC-H25	UC40	UC33-TE	UC-A36	UC-SCR33
35 X 5.0	UC-H25	UC36	UC30-TE	UC-A33	UC-SCR30
38 X 2.5	UC-38X5.0	UC50	UC40-TE	UC-A45	UC-SCR40
38 X 3.0	UC-38X5.0	UC50	UC40-TE	UC-A45	UC-SCR40
38 X 4.0	UC-38X5.0	UC45	UC40-TE	UC-A40	UC-SCR40
38 X 5.0	UC-38X5.0	UC40	UC36-TE	UC-A36	UC-SCR36
42 X 2.0	UC-42X3.0	UC55	UC50-TE	UC-A50	UC-SCR50
42 X 3.0	UC-42X3.0	UC50	UC45-TE	UC-A50	UC-SCR45
50 X 3.0	UC-50X6.0	UC60	UC55-TE	UC-A55	UC-SCR55
50 X 5.0	UC-50X6.0	UC55	UC50-TE	UC-A55	UC-SCR50
50 X 6.0	UC-50X6.0	UC55	UC50-TE	UC-A50	UC-SCR50

***Requirements for Tubing Applications:**
Tubing must be deburred prior to firing projectiles. Depending on the type of contamination present in the tube, abrasive projectiles may be used to remove rust and scale. Always use an UC or TUBE projectile after the use of an abrasive projectile. The TUBE style is strongly recommended for stainless steel for mild to medium amounts of contamination, surface rust, or scale build-up. If the operator is unsure which type or size projectile to use, please call us for technical assistance.

J&E Machines B.V.
Jacobus Lipsweg 100
NL-3316 BP Dordrecht
+31 (0) 78 617 98 39
info@jemachines.nl
IBAN: NL87INGB0662309022
BTW: NL809898329.B01
KvK: 24322318
www.jemachines.nl

Pipe Sizing Chart

SCH 40	Nozzle	Projectile Type			
		UC	Tube	Abrasive	Scrub
¼"	UC-H08	UC14	UC12-TE	UC-A12	UC-SCR12
⅜"	UC-H13	UC18	UC16-TE	UC-A16	UC-SCR16
½"	UC-H16	UC20	UC18-TE	UC-A18	UC-SCR18
¾"	UC-H19	UC30	UC26-TE	UC-A26	UC-SCR26
1"	UC-H25	UC36	UC33-TE	UC-A33	UC-SCR33
1¼"	UC-H32	UC45	UC40-TE	UC-A40	UC-SCR40
1½"	UC-H38	UC55	UC50-TE	UC-A50	UC-SCR50
2"	UC-H50	UC65	UC55-TE or UC60-TE	UC-A55 or UC-A60	UC-SCR55 or UC-SCR60
2½"	UC-U55/90	UC75	N/A	UC-A70	N/A
3"	UC-U55/90	UC85	N/A	UC-A80	N/A
3½"	UC-U55/90	UC100	N/A	UC-A95	N/A
4"	UC-4.5LN	UC120	N/A	UC-A110	N/A
SCH 80	**Nozzle**	**Projectile Type**			
		UC	**Tube**	**Abrasive**	**Scrub**
⅜"	UC-H10	UC16	UC14-TE	UC-A14	UC-SCR14
½"	UC-H13	UC20	UC16-TE or UC18-TE	UC-A16 or UC-A18	UC-SCR16 or UC-SCR18
¾"	UC-H19	UC26	UC22-TE	UC-A22	UC-SCR22
1"	UC-H25	UC36	UC30-TE	UC-A30	UC-SCR30
1¼"	UC-H32	UC45	UC40-TE	UC-A40	UC-SCR40
1½"	UC-H38	UC50	UC45-TE	UC-A45	UC-SCR45
2"	UC-H38	UC60	UC55-TE	UC-A55	UC-SCR55
2½"	UC-H50	UC70	N/A	UC-A65	N/A
3"	UC-U55/90	UC85	N/A	UC-A80	N/A
3½"	UC-U55/90	UC110	N/A	UC-A110	N/A
4"	UC-4.5LN	UC115	N/A	UC-A110	N/A
SCH 160	**Nozzle**	**Projectile Type**			
		UC	**Tube**	**Abrasive**	**Scrub**
¾"	UC-H16	UC20	UC18-TE	UC-A18	UC-SCR18
1"	UC-H19	UC30	UC26-TE	UC-A26	UC-SCR26
1¼"	UC-H25	UC36	UC33-TE	UC-A33	UC-SCR33
1½"	UC-H32	UC45	UC40-TE	UC-A40	UC-SCR40
2"	UC-H38	UC55	UC45-TE or UC50-TE	UC-A45 or UC-A50	UC-SCR45 or UC-SCR50
2½"	UC-H50	UC65	UC55-TE or UC60-TE	UC-A60	UC-SCR55 or UC-SCR60
3"	UC-U55/90	UC75	N/A	UC-A70	N/A
4"	UC-U55/90	UC100	N/A	UC-A100	N/A

Abrasive projectiles may be used when there is build-up of contamination, surface rust or scale. For pipe applications with greater build-up, use an Ultra Scrub projectile (pipe must be straight). An UC projectile must be used after abrasive and scrub projectiles. Call if you need help in sizing your application for the correct nozzles and projectiles.

J&E Machines B.V.
Jacobus Lipsweg 100
NL-3316 BP Dordrecht
+31 (0) 78 617 98 39
info@jemachines.nl
IBAN: NL87INGB0662309022
BTW: NL809898329.B01
KvK: 24322318
www.jemachines.nl

Hose Cleanliness Evaluation Report

OILPURESYSTEMS
The Machine Reliability Company

Company: **Ultra Clean Technologies Corp.**
Address: **746 Shiloh Pike**
City: **Bridegeton** State: **NJ** Zip: **08302**
Telephone: **1-800-791-9111** Fax: **856-453-4975**
Contact: **Bruce Riley**
Title: **President**
E-mail: **briley@ultracleantech.com**

Test Date: **September 5, 2006**
New Oil for Evaluation: **AW46 Hydraulic Oil**
Hose Type: -16 1" x 28" oal, 4 spiral hyd hose assembly w 1" Male NPT EE
Note:

Dear Bruce

Test Procedure

1. The hose was rinsed with new hydraulic oil several times with non-contact flow technique.
2. The hose is washed with the same oil quantity of new oil each time
3. New hydraulic oil is AW46 viscosity grade and filtered to a low ISO code cleanliness before testing.
4. Laser light particle count is used as particle count analysis. Particle counter is made by HIAC/ROYCO and uses the ISO:4406-99 standard for particle count method. Special quality control for particle count testing is made to make sure that the particle count shows accurate reading.
5. All oil samples were tested twice to make sure that particle count reading confirms accuracy.

We hope that this test data will provide sufficient information regarding hose cleanliness evaluation.

Yours sincerely,

Vichai Srimongkolkul
Technical Director

Item No.	Hose I.D.	Hose Descriptions	Solid Contamination Particle Count in 1 cc						ISO Code
			4µ	6µ	14µ	20µ	30µ	40µ	
	NEW	New AW 46 Hydraulic Oil as base line comparsion	214	64	23	9	1	0	**15 / 13 / 12**
1	A1	Chop saw with abrasive wheel - no cleaning	99,999	99,999	92,618	67,576	29K	15K	**24 / 24 / 24**
2	A2	Chop saw with abrasive wheel - 10 second air blow	96,508	52,827	4,546	1,013	53	13	**24 / 23 / 19**
3	A3	Chop saw with abrasive wheel - **Ultra Clean**	1,824	511	54	20	2	0	**18 / 16 / 13**
4	A4	Chop saw with metal scalloped blade - no cleaning	99,999	99,999	54,879	29,617	6.4K	2.5K	**24 / 24 / 23**
5	A5	Chop saw with metal scalloped blade - 10 second air blow	99,999	84,470	18,639	5,725	752	247	**24 / 24 / 21**
6	A6	Chop saw with metal scalloped blade - **Ultra Clean**	2,354	638	73	22	5	1	**18 / 16 / 13**

OilPure Technologies, Inc. P.O. Box 483976 • Kansas City • Missouri • 64148• USA • Tel: 913-906-0400 • Fax: 913-906-9815 • www.oilpure.com

J&E Machines B.V.
Jacobus Lipsweg 100
NL-3316 BP Dordrecht
+31 (0) 78 617 98 39
info@jemachines.nl
IBAN: NL87INGB0662309022
BTW: NL809898329.B01
KvK: 24322318
www.jemachines.nl

SEAL EASY

Hose, Tube and Pipe Sealing Systems

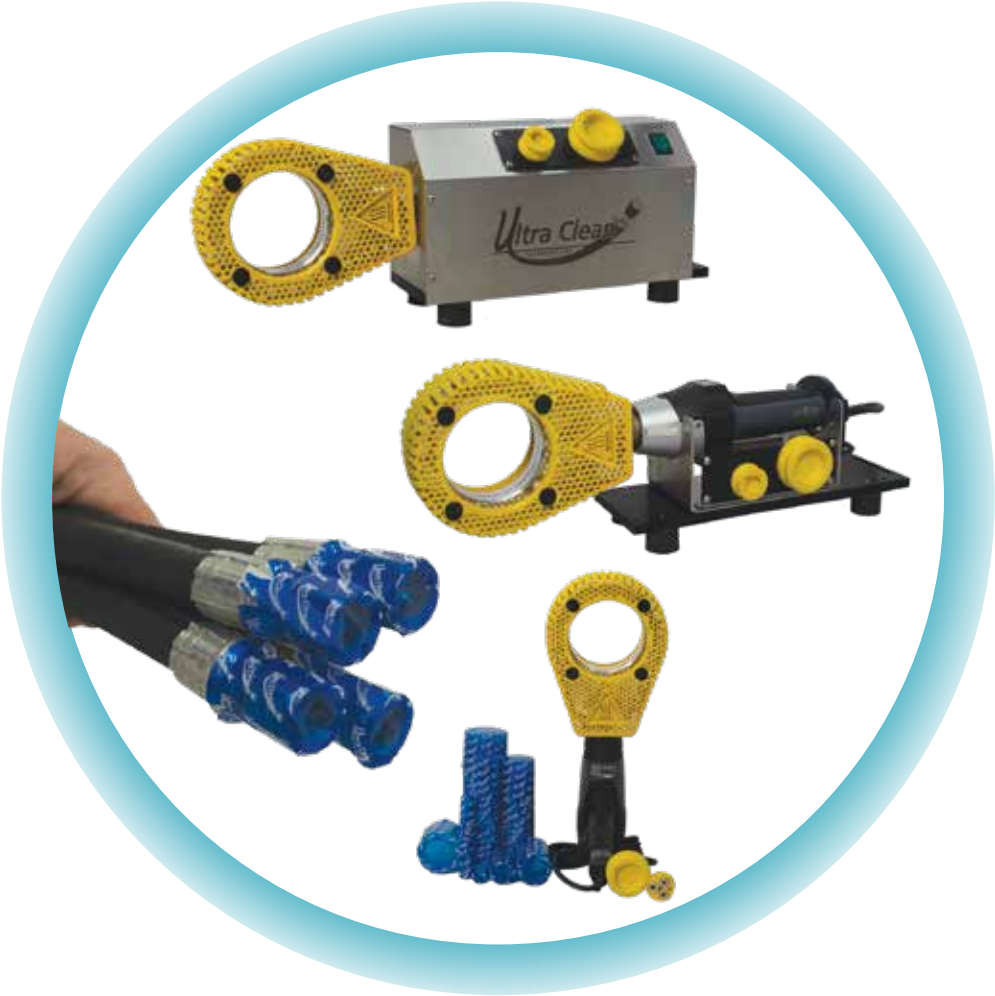

Ultra Clean Technologies offers innovative and economical solutions to protect cleaned hoses, tubes and pipes. The **Clean Seal System** heat-shrinks a **Clean Seal Capsule** tightly around the end of a hose assembly. Seal a single hose, or multiple hoses simultaneously! Just nineteen size capsules needed for most applications. Shorter capsules available to accomodate angle/elbow (ie: 45° and 90°) fittings.

Clean Seal System,
Heat Shrink Gun, Clean Seal Kits,
Clean Seal Capsules,
Capsule Dispenser Stand

Connect with Ultra Clean!

Seal Easy with Ultra Clean!

J&E Machines B.V.
Jacobus Lipsweg 100
NL-3316 BP Dordrecht

+31 (0) 78 617 98 39
info@jemachines.nl

IBAN: NL87INGB0662309022
BTW: NL809898329.B01

KvK: 24322318
www.jemachines.nl

Clean Seal System

The Clean Seal System utilizes heat shrink technology to encapsulate the end of a hose or tube assembly with a Clean Seal Capsule, eliminating re-contamination that is problematic with traditional capping and plugging methods. Re-contamination occurs when ill-fitting caps and plugs are forced onto assemblies, causing plastic particles to shear off into the hose or tube. Clean Seal System leaves your assemblies tightly sealed and 100% contamination free, and provides an easier, less costly, and more effective solution than traditional capping methods. You'll never have to deal with an excessive cap and plug inventory again.

UC-CSC-1424 *through* UC-CSC-8060 Clean Seal Capsules

- Preserves cleanliness.
- Eliminates cap inventory hassles.
- Fast, clean, and easy capsule installation.
- Easy, pull-tab removal.
- No particulates or sticky residue left behind.
- Just 19 capsule sizes needed for all assemblies.
- Universal, durable, secure fit up to 3" (78mm).
- Easy to use heat shrink machine or heat shrink gun for low or high volume production.
- Seals straight and elbow couplings - shorter capsules available for angled/elbow (i.e.: 45° and 90°) fittings.
- Standard blue color or custom color private labeling for easy identification.
- Sold in bulk cartons or packaged quantities.
- Shipped pre-stacked to ensure cleanliness on inside.
- Recyclable through your local recycle program.

Clean Seal Capsules stack neatly for efficient shipping and storing!

Easy-On/Easy-Off Application

Secure and Seal!

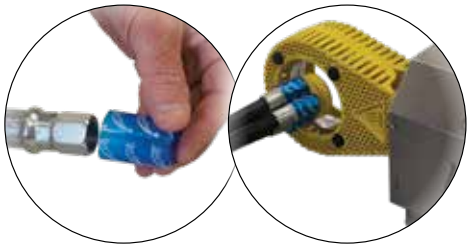

Secure the appropriate size Clean Seal Capsule onto the end of hose or tube fitting using the Magnetic Puck.

Seal the secured fitting by slowly placing through the Air Knife for a perfect heat-shrink seal.

Rip and Remove!

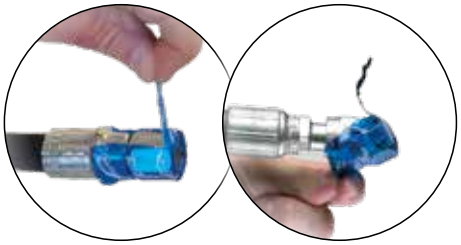

Rip the convenient pull-tab upward.
Remove the loosened Clean Seal Capsule.

Custom-Printed Private Label Capsules

Become professional grade and showcase your brand, quality, and cleanliness!

Take advantage of Ultra Clean's in-house custom capsule printing capabilities to promote your brand and your brand's dedication to cleanliness.

- Low minimum order quantity (MOQ) requirements.
- Custom printed logos in full color.
- Film available in blue, white, red, green, and yellow.
- Minimal cost for high visibility!

J&E Machines B.V.
Jacobus Lipsweg 100
NL-3316 BP Dordrecht
+31 (0) 78 617 98 39
info@jemachines.nl
IBAN: NL87INGB0662309022
BTW: NL809898329.B01
KvK: 24322318
www.jemachines.nl

UC-CSS-230V-AK Clean Seal System w/Air Knife

UC-CSS-120V-AK Air Knife and Cradle

Designed for premium-fit sealing of carbon steel fittings in a production environment

- Magnetic Puck holds capsule onto carbon steel fitting for a perfect seal during sealing process.
- Magnetic Puck holds the nut forward on 90° and 45° fittings for easy insertion into the Air Knife.
- Air Knife has heat guard and large 110mm center opening accessible from either side.
- One pass seals single or multiple hose or tube assemblies.
- Capsules fit and seal hose and tube fittings from 3/8" OD (10mm) through 3" OD (78mm).
- 230V single-phase AC power at 50/60Hz draws < 5 amps.
- Customer supplies L6-15 NEMA twist lock receptacle (North American market only).
- ON/Off rocker switch illuminates green when "on."
- 24/7 operating capacity.
- Built-in external air filter minimizes heat gun clogging and maintenance, increasing heat gun longevity.
- Heat side of machine is fully insulated.
- Durable, long-lasting brushless motor for high-volume production environments.

- A Cradle holds and locks the 120V heat gun into place for bench top shrinking of capsules.
- The heat gun can be easily removed from the cradle for remote capsule shrinking.
- Magnetic Puck holds the Capsule onto the fitting for a perfect seal during the shrinking process.
- Magnetic Puck pulls the swivel nut forward on 90° and 45° fittings for easy insertion into the Air Knife for capsule shrinking.
- Air Knife has heat guard and large 110mm center opening that can be accessed from either side.
- Can seal single or multiple hose or tube assemblies.
- Clean Seal Capsules will seal hose or tube fittings from 3/8" OD (10mm) through 3" OD (78mm).

Capsule Shrink Time for Clean Seal Systems at Multiple Intervals

Machine Warm-up Time from Cold Start (Minutes)	1	2	3	4	5	6	7	8	9	10
Machine	**Seal Time (Seconds)**									
UC-CSS-230V-AK	3.5	2.5	2	1.5	1.25	1	1	0.75	0.75	0.75
UC-CSS-120V-AK	17	10	4.5	3.25	2.5	2.25	2	1.75	1.5	1.5
UC-HL1920E	20	12	6	4	3	3	2.5	2	1.75	1.75

J&E Machines B.V.
Jacobus Lipsweg 100
NL-3316 BP Dordrecht
+31 (0) 78 617 98 39
info@jemachines.nl
IBAN: NL87INGB0662309022
BTW: NL809898329.B01
KvK: 24322318
www.jemachines.nl

UC-HL1920E Heat Shrink Gun

- Variable-temperature electronic heat gun with thermocouple control for flexible use and maximum reliability.
- Duratherm heating element for long life and even heat with a temperature range of 120°F (49°C) to 1100°F (593°C).
- Cool down switch renders gun immediately cool-to-the-touch.
- 120V AC power draws 1500 watts, produces 17.6CFM *(European model uses 240V AC and european plug).*
- Capable of sealing multiple hoses simultaneously.

Accessories

See previous page for usage and benefits.

UC-1.5-AK Air Knife w/Heat Guard

UC-SMP (small) UC-LMP (large) Magnetic Puck

Clean Seal System Kits (3)

Available in North America only

1. UC-HL1920HK: Hardware-only kit that includes portable heat shrink gun, 110mm air knife.
2. UC-HL1920SK: Hardware & Capsules Starter Kit that includes capsules listed on Clean Seal System Parts List on following pages.
3. UC-HL1920SK-2: Hardware & Capsules Starter Kit for applications up to 2" ID that includes capsules listed on Clean Seal System Parts List on following pages.

See next page for Capsule Dispenser Stand Kit and Parts.

J&E Machines B.V.
Jacobus Lipsweg 100
NL-3316 BP Dordrecht
+31 (0) 78 617 98 39
info@jemachines.nl
IBAN: NL87INGB0662309022
BTW: NL809898329.B01
KvK: 24322318
www.jemachines.nl

UC-CD-DK *Easily store and dispense Clean Seal Capsules!*
Capsule Dispenser Stand Kit

Hook and groove system enables easy and flexile positioning of dispenser tubes!

The full size range of Clean Seal Capsules is accomodated by just four sizes of transparent, removable dispenser tubes (UC-CD-1.0, UC-CD-1.5, UC-CD-2.5, & UC-CD-3.0). Each capsule size requires a separate dispenser tube.

Strong magnetic strip holds dispenser tubes firmly in place.

Easel-like design enables placement on a bench or flat surface, or mounted to a wall.

Unique magnetic disc and removal wand system assists in gently dispensing the first capsule from every newly inserted Clean Seal Capsule stick. Grommet and lanyard for pull-wand included.

Capsule identifier (size, part number) labels provided for dispenser tubes for easy identification, loading and re-ordering.

Part Number #	Description
Stand (& included parts upon first order)	
UC-CDS	Stand w/magnetic strip
UC-CD-Wand	Removal Wand
UC-CD-SC	Laminated Clean Seal Capsule Sizing Chart with Grommet
UC-CD-LNYD	Laminated Clean Seal Capsule Sizing Chart with Lanyard
Dispenser Tubes	
UC-CD-1.0	Dispenser for UC-CSC-1424, UC-CSC-1624, UC-CSC-1824
UC-CD-1.5	Dispenser for UC-CSC-2023, UC-CSC-2030, UC-CSC-2224, UC-CSC-2527, UC-CSC-2540, UC-CSC-2840, UC-CSC-3133, & UC-CSC-3140
UC-CD-2.5	Dispenser for UC-CSC-3440, UC-CSC-3840, UC-CSC-4345, UC-CSC-4650
UC-CD-3.0	Dispenser for UC-CSC-5260, UC-CSC-5860, UC-CSC-6760
Kit	
UC-CD-DK	Includes stand with magnetic strip, three (3) small, one (1) medium, and one (1) large dispenser tube.

Laminated Clean Seal Capsule Chart included.

J&E Machines B.V.
Jacobus Lipsweg 100
NL-3316 BP Dordrecht
+31 (0) 78 617 98 39
info@jemachines.nl
IBAN: NL87INGB0662309022
BTW: NL809898329.B01
KvK: 24322318
www.jemachines.nl

Clean Seal System *and* Capsules Parts List

Part Number#	Description
Heat Shrink Machine	
UC-CSS-230V-G2	Production Clean Seal System with Timer
UC-CSS-230V-HG-G2	Production Clean Seal System with Heat Guard and Timer
UC-CSS-230V-AK	Production Clean Seal System, Air Knife with Heat Guard and Magnetic Pucks
UC-CSS-120V-AK	120V Heat Shrink Gun, Cradle, Air Knife with Heat Guard and Magnetic Pucks
Heat Shrink Guns and Accessories	
UC-HL1920E	Heat Shrink Gun
UC-1.5-AK	100mm Air Knife with Heat Guard for 1½" Connection
UC-2.0-AK	100mm Air Knife with Heat Guard for 2" Connection
UC-SMP	Small Magnetic Puck
UC-LMP	Large Magnetic Puck
Clean Seal Kits (Available in N. America only)	
UC-HL1920HK (Hardware Kit)	120V Heat Shrink Gun (UC-HL1920E), 100mm Air Knife *with* Heat Guard for 1½" Connection (UC-1.5-AK) and Magnetic Pucks (UC-SMP, UC-LMP)
UC-HL1920SK (Starter Kit)	Includes all component of UC-HL1920HK Kit, plus one (1) package of each capsule size UC-CSC-1824P, UC-CSC-2030P, UC-CSC-2540P, UC-CSC-2840P, UC-CSC-3140P, UC-CSC-3440P, UC-CSC-3840P, UC-CSC-4650P
UC-HL1920SK-2	Includes all component of UC-HL1920HK and UC-HL1920SK kits, plus one (1) package of each capsule size UC-CSC-5260P, UC-CSC-6760P, UC-CSC-8060P

*Shorter length capsules are recommended for elbow/angled fittings (i.e. 45° and 90°).

Clean Seal Capsules

Packaged		Bulk		Sizing			*Fitting	
Part Number#	Carton Qty	Part Number#	Carton Qty	Capsule Size *Inside Diameter x Length* in mm	Hex Sizes Covered in mm	Hex Sizes Covered in inches	Straight	Elbow
UC-CSC-1424P	960	UC-CSC-1424B	12,320	14X24	10mm to 13mm	.39" to .51"	X	X
UC-CSC-1624P	840	UC-CSC-1624B	9,000	16X24	12mm to 15mm	.47" to .59"	X	X
UC-CSC-1824P	840	UC-CSC-1824B	7,360	18X24	14mm to 17mm	.55" to .67"	X	X
UC-CSC-2023P	810	UC-CSC-2023B	23,400	20 X 23	15mm to 19mm	.59" to .75"		X
UC-CSC-2030P	810	UC-CSC-2030B	23,400	20 X 30	15mm to 19mm	.59" to .75"	X	
UC-CSC-2224P	810	UC-CSC-2224B	22,500	22 X 24	18mm to 21mm	.71" to .83"		X
UC-CSC-2527P	800	UC-CSC-2527B	17,600	25 X 27	18mm to 24mm	.71" to .94"		X
UC-CSC-2540P	800	UC-CSC-2540B	17,600	25 X 40	18mm to 24mm	.71" to .94"	X	
UC-CSC-2840P	720	UC-CSC-2840B	15,200	28 X 40	22mm to 26mm	.87" to 1.02"	X	
UC-CSC-3133P	640	UC-CSC-3133B	12,240	31 X 33	24mm to 29mm	.94" to 1.14"		X
UC-CSC-3140P	640	UC-CSC-3140B	12,240	31 X 40	24mm to 29mm	.95" to 1.14"	X	
UC-CSC-3440P	640	UC-CSC-3440B	10,240	34 X 40	27mm to 32mm	1.07" to 1.26"	X	
UC-CSC-3840P	560	UC-CSC-3840B	7,800	38 X 40	30mm to 36mm	1.19" to 1.42"	X	X
UC-CSC-4345P	480	UC-CSC-4345B	6,240	43 X 45	32mm to 41mm	1.26" to 1.61"	X	X
UC-CSC-4650P	480	UC-CSC-4650B	5,760	46 X 50	34mm to 44mm	1.34" to 1.73"	X	X
UC-CSC-5260P	400	UC-CSC-5260B	4,400	52 X 60	41mm to 50mm	1.62" to 1.97"	X	X
UC-CSC-5860P	400	UC-CSC-5860B	3,600	58 X 60	49mm to 56mm	1.93" to 2.20"	X	X
UC-CSC-6760P	320	UC-CSC-6760B	2,560	67 X 60	55mm to 65mm	2.16" to 2.56"	X	X
UC-CSC-8060P	420	UC-CSC-8060B	1,736	80 X 60	64mm to 78mm	2.52" to 3.07"	X	X

Grey area indicates capsule sizes included in kit UC-HL1920SK.

J&E Machines B.V.
Jacobus Lipsweg 100
NL-3316 BP Dordrecht
+31 (0) 78 617 98 39
info@jemachines.nl
IBAN: NL87INGB0662309022
BTW: NL809898329.B01
KvK: 24322318
www.jemachines.nl

Capsule Size Selection by Fitting

Fitting	Capsule
– 2 NPT Male	1424
– 4 NPT Male	1824 or 2030
– 4 JIC Fem	1624, 1824 or 2030
– 4 JIC Fem 90	1824 or 2023
– 4 Flat Face Fem	2030
– 4 Flat Face Fem 90	2023
– 5 JIC Fem	2030
– 6 NPT Male	2030
– 6 JIC Fem	2540
– 6 JIC Fem 90	2527
– 6 Flat Face Fem	2540
– 6 Flat Face Fem 90	2527
– 8 NPT Male	2840
– 8 JIC Fem	2840
– 8 JIC Fem 90	2840
– 8 Flat Face Fem	2840
– 8 Flat Face Fem 90	2840
– 8 Flange Code 61	3133 or 3140
– 8 Flange Code 62	3440
– 10 JIC Fem	3140
– 10 JIC Fem 90	3133
– 10 Flat Face Fem	3440
– 10 Flat Face Fem 90	3440
– 10 Komatsu Flange	3840
– 12 NPT Male	3140
– 12 JIC Fem	3840
– 12 JIC Fem 90	3840
– 12 Flat Face Fem	4345
– 12 Flat Face Fem 90	4345
– 12 Flange Code 61	3840 or 4345
– 12 Flange Code 62	4345

Fitting	Capsule
– 16 NPT Male	4650
– 16 JIC Fem	4650 or 5260
– 16 JIC Fem 90	4650 or 5260
– 16 Flat Face Fem	4650 or 5260
– 16 Flat Face Fem 90	4650 or 5260
– 16 Flange Code 61	4650
– 16 Flange Code 62	5260
– 20 NPT Male	5260
– 20 JIC Fem	5860
– 20 Flat Face Fem	5860
– 20 Flange Code 61	5260
– 20 Flange Code 62	6760
– 24 NPT Male	5860
– 24 JIC Fem	8060
– 24 Flat Face Fem	8060
– 24 Flange code 61	6760
– 24 Flange code 62	6760
– 32 NPT Male	8060
– 32 JIC Female	N/A
– 32 Flange Code 61	8060
– 32 Flange Code 62	8060

J&E Machines B.V.
Jacobus Lipsweg 100
NL-3316 BP Dordrecht
+31 (0) 78 617 98 39
info@jemachines.nl
IBAN: NL87INGB0662309022
BTW: NL809898329.B01
KvK: 24322318
www.jemachines.nl

Capsule Size Selection by Wrench Size

Wrench Size (mm)	O.D. Hex (mm)	Wrench Size (inches)	O.D. Hex (mm)	Capsule Size (First two numbers = outside diameter, Second two numbers = length)	
				Straight	Elbow
10	11.05			1424	
11	12.12	7/16	12.83	1424	
13	14.92	1/2	14.66	1624	
14	16.02	9/16	16.51	1824	
15	17.18			1824	
16	18.58	5/8	18.34	2030	2023
17	19.74			2030	2023
18	20.9	11/16	20.17	2224	
19	22.27	3/4	22.00	2540	2527
		13/16	23.83	2540	2527
22	24.49	7/8	25.65	2540	2527
24	26.75	15/16	27.51	2840	
27	29.56			3140	3133
30	32.95	1-1/8	32.99	3440	
32	35.03			3840	
36	39.55	1-5/16	38.51	4345	
41	45.2	1-1/2	43.99	4650	
46	50.85	1-11/16	49.50	5260	
50	55.37	1-7/8	54.99	5860	
55	60.79	2-1/16	60.50	6760	
60	66.44	2-1/4	65.99	6760	
65	71.3	2-7/16	71.50	8060	
70	76.95	2-5/8	76.99	8060	

If capsule sizes do not match your fittings exactly, use the maximum outside diameter of the fitting. The result of the outside diameter should be slightly smaller than the first two digits of the capsule size (as given in the right-hand column of the chart above); the last two digits indicate the length of the capsule in mm.

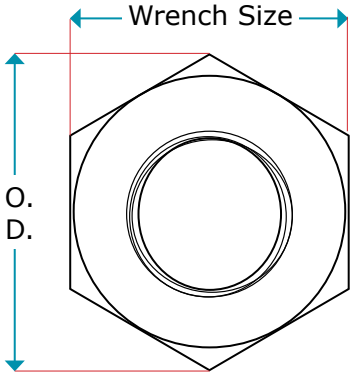

J&E Machines B.V.
Jacobus Lipsweg 100
NL-3316 BP Dordrecht
+31 (0) 78 617 98 39
info@jemachines.nl
IBAN: NL87INGB0662309022
BTW: NL809898329.B01
KvK: 24322318
www.jemachines.nl

ULTRA CLEAN TECHNOLOGIES CORP.

1274 Highway 77• BRIDGETON, NJ 08302 U.S.A.
TOLL-FREE: 800-791-9111 • 856-451-2176 • INT'L: +1 856-451-2176
Email: sales@ultracleantech.com • www.ultracleantech.com

Connect with Ultra Clean!